Bark Blower

BB 5-Series Bark & Mulch Blower

The new BB 5-Series Bark & Mulch Blower was designed with simplicity and reliability in mind for landscape and erosion control contractors. Its simplified control system and streamlined engineering make it a dependable workhorse for bark, mulch, compost and soil blend applications. This mid-size bark and mulch blower is straightforward to operate, maintain and troubleshoot, leading to vital uptime and optimal productivity. Products can be applied on virtually any terrain, even in wet conditions, and the BB 5-Series can be especially profitable when accessing hard-to-reach areas.

Applications

Residential and commercial landscape bed maintenance, filling/installing sediment control filter socks, playground safety surface installation and renewal, topdressing turf, indoor courtyard gardens, and other applications that require precise placement of bulk materials.

Saving Time & Labor & Materials = Profitability

Save labor by avoiding the manual work of spreading material using wheelbarrows and rakes. Two workers alone can apply 15 cubic yards of mulch per hour with the BB 5-Series, depending on job conditions and material. This means that you can make more money by doing more jobs in a day and putting your now extra laborers who were moving product with wheelbarrows and rakes to work for you on more profitable projects! Additionally, you can save as much as 25% in product due to the ability to blow a smooth, even mulch layer, rather than the thick and thin irregular application that happens when product is spread manually.

Features & Benefits

- Full 5 cubic yard material hopper for increased productivity and clear-cut job costing.
- Simplified control system for ease of operation, ease of training, and reliable performance.
- Simplified engineering for critical uptime and easier maintenance and troubleshooting.
- Lightweight design for increased payload capacity and more versatile towing options.
- Fuel tank sized to run machine for at least 9 hours.
- Side mounted engine with an open design for enhanced maintenance access.
- Convenient hose reel, hydraulically powered, is sold with 150 feet of 4-inch blower hose but can accommodate up to 200 feet.
- Electric tarp standard to help meet DOT laws for load coverage.
- Optional water injection system for dust suppression in particularly dry conditions or with particularly dry materials.

The BB 5-Series Bark and Mulch Blower completes the FINN Bark Blower line which also includes the BB302 (1.5 yd3 box), BB1208 (8.2 yd3 box), BB1216 (15.7 yd3 box), and the BB1222 (21.8 yd3 box). FINN Bark Blowers are covered with an industry leading 1 year/1,200 hour warranty, whichever comes first. All FINN machines are proudly made in the USA.

Model shown may include optional equipment.

Bark Blower

Model 5-Series with Tier 4F Diesel Engine

BB 5-SERIES TRAILER

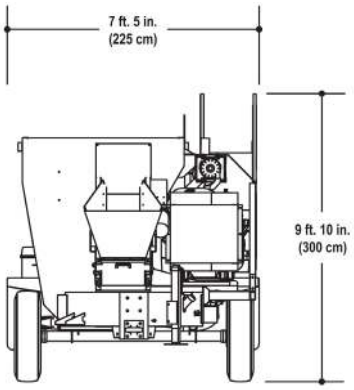

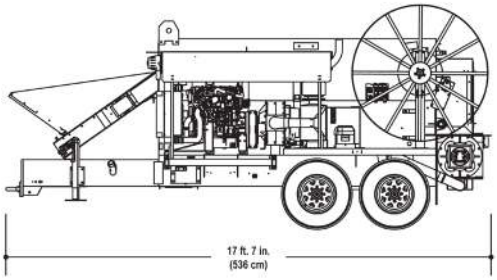

FINN MODEL BB 5-SERIES TECHNICAL SPECIFICATIONS

POWER	Cummins QSF 2.8 Diesel Tier 4F, 65hp (48 kW)
ENGINE SAFETY SYSTEM	Low oil pressure, electronic engine control and monitoring
CAPACITY	5 cubic yd (3.8m^3)
HOSE REEL CAPACITY	150 ft (45 m)
FUEL TANK CAPACITY	25 gallon (94 liter)
BLOWER	725cfm @ 12 psi (20 cmm @ 88 kPa)
EMPTY WEIGHT*	8,835 lbs. (4,007 kg)
WORKING WEIGHT*	12,585 lbs. (5,708 kg)
GVWR*	14,400 lbs. (6,532 kg) towing capacity

*Working weights are approximate and do not include options or stored materials. Based on material at 750 lbs./cu. yd.

FINN Corporation has a policy of continuous product improvement, and reserves the right to change design and specifications without notice.

FINN Design® Logo is a trademark of FINN Corporation.

9281 LeSaint Drive • Fairfield, OH 45014-5457
Toll Free 800.543.7166 / 513.874.2818
FINNcorp.com

©FINN Corporation 04282016